CL.1 Three-hole basin mixer without pop-up waste - Chrome

ST 010 106 4705

- with WAVES structure
- 200mm projection
- fixed spout
- rectangular spray pattern with 40 individual jets
- height of mixer 343 mm
- height up to aerator 329 mm
- hole diameter valve 32 mm
- hole diameter spout 35 mm
- rosette 60 x 47 mm
- 2x screw-in M 10 x 1 pressure hose, leak-tested
- max. flow 4 l/min
- lead-free
- This product can help a building meet the requirements of Green Building Rating Systems, e.g. LEED®, BREEAM®, DGNB

Chrome	ST 010 106 4705-00
Brushed Platinum	ST 010 106 4705-06
Brushed Dark Platinum	ST 010 106 4705-99

Individual components of this set

You need the following components for this set

1x 13 717 705-00

1x 20 005 705-00

1x 20 005 706-00

CL.1 Three-hole basin mixer without pop-up waste - Chrome

ST 010 106 4705

CL.1 Three-hole basin mixer without pop-up waste - Chrome

ST 010 106 4705

- 200mm projection
- fixed spout
- rectangular spray pattern with 40 individual jets
- height of mixer 343 mm
- height up to aerator 329 mm
- hole diameter 35 mm
- max. flow 4 l/min
- 1/2" connection
- 2x screw-in M 10 x 1 pressure hose, leak-tested
- lead-free
- This product can help a building meet the requirements of Green Building Rating Systems, e.g. LEED®, BREEAM®, DGNB
- WRAS

Chrome	13 717 705-00
Brushed Platinum	13 717 705-06
Dark Chrome	13 717 705-19
Brushed Champagne (22kt Gold)	13 717 705-46
Champagne (22kt Gold)	13 717 705-47
Brushed Dark Platinum	13 717 705-99

CL.1 Three-hole basin mixer without pop-up waste - Chrome

ST 010 106 4705

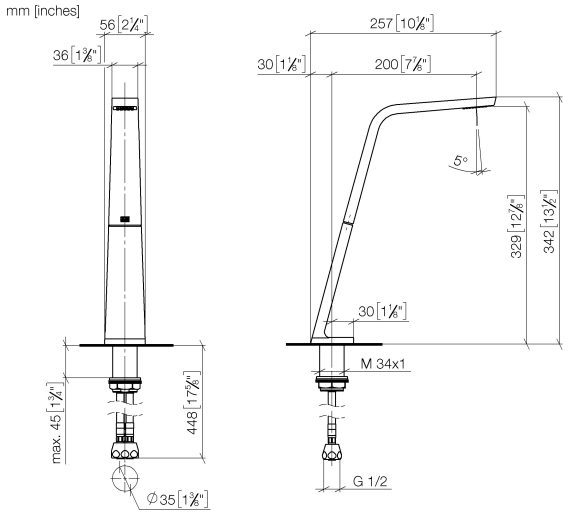

Flow rate chart

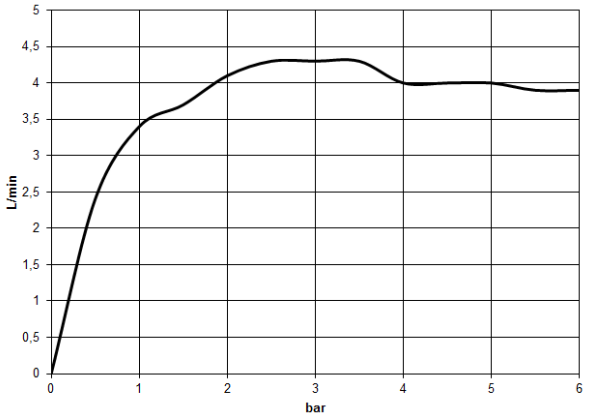

Codes & Standards

ASME A112.18.1	ASME A112.18.1/CSA B125.1	California Energy Commission (CEC)	cUPC
DIN 4109	EPA WaterSense	Executive Order no. 1007	ISO 3822
NSF/ANSI 372	NSF/ANSI/CAN 61	NSF372	NSF61
Scottish Water Byelaws	UK Water Supply Regulations	Ü-Zeichen	Water Sense
WaterSense			

CL.1 Three-hole basin mixer without pop-up waste - Chrome

ST 010 106 4705

Certificates

GDV_0400	LGA_28	IAPMO_N-4	IAPMO_8834	IAPMO_4976
WRAS_1512	IAPMO_6			

CL.1 Three-hole basin mixer without pop-up waste - Chrome

ST 010 106 4705

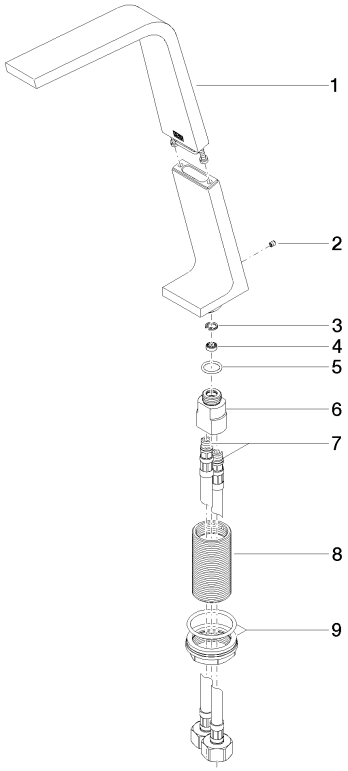

Spare parts list

No.	Item Number	Name	Quantity used	Delivery time
1	90 11 70 003 00-00	spout	1	10
2	09 31 11 044 90	pin	1	2
3	09 16 01 016 90	ring	1	2
4	09 23 01 034 90	flow reducer	1	2
5	09 14 10 130 90	seal	1	2
6	09 11 10 055 10 90	connection	1	2
7	04 30 04 019 00 90	hose	2	2
8	09 30 01 208 90	connection	1	2
9	04 23 10 044 06 90	fixing set	1	2

CL.1 Three-hole basin mixer without pop-up waste - Chrome

ST 010 106 4705

- with WAVES structure
- hole diameter 32 mm
- rosette 60 x 47 mm
- with cold marking
- WRAS

Chrome	20 005 705-00
Brushed Platinum	20 005 705-06
Dark Chrome	20 005 705-19
Brushed Champagne (22kt Gold)	20 005 705-46
Champagne (22kt Gold)	20 005 705-47
Brushed Dark Platinum	20 005 705-99

CL.1 Three-hole basin mixer without pop-up waste - Chrome

ST 010 106 4705

CL.1 Three-hole basin mixer without pop-up waste - Chrome

ST 010 106 4705

mm [inches]

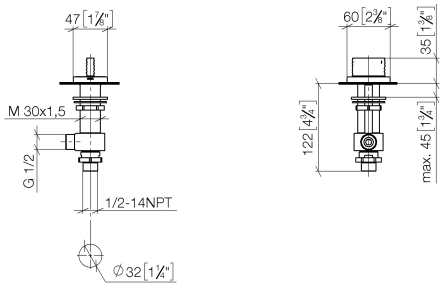

Flow rate chart

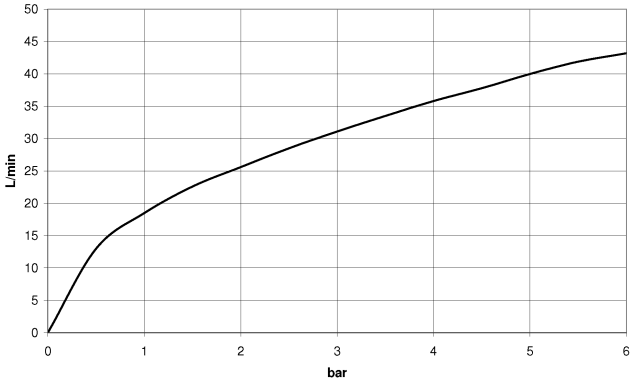

Codes & Standards

ADA	ASME A112.18.1/CSA B125.1	DIN 4109	ISO 3822
NSF/ANSI 372	NSF/ANSI/CAN 61	NSF372	NSF61
Scottish Water Byelaws	UK Water Supply Regulations	Ü-Zeichen	

Certificates

WRAS_1804	IAPMO_N-4	LGA_28	IAPMO_6	WRAS_240202

CL.1 Three-hole basin mixer without pop-up waste - Chrome

ST 010 106 4705

CL.1 Three-hole basin mixer without pop-up waste - Chrome

ST 010 106 4705

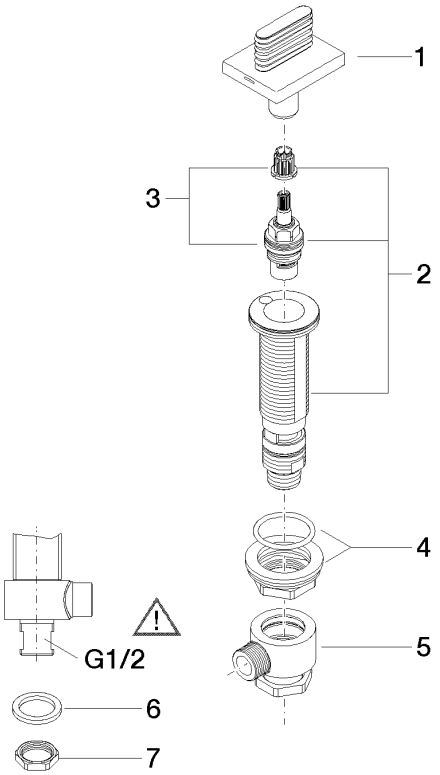

Spare parts list

No.	Item Number	Name	Quantity used	Delivery time
1	90 20 70 055 06-00	handle (cold)	1	10
2	04 17 11 058 53 90	side panel	1	2
3	90 90 03 153 00 90	top	1	2
4	04 23 10 032 78 90	fixing set	1	2
5	04 17 11 023 10 90	distributor	1	2
6	90 23 30 040 00-00	threaded connector	1	10
7	09 30 11 059 90	disc	1	2
8	09 23 10 012 90	nut	1	2

We reserve the right to change designs, product range and technical specifications without prior notice.
More information can be found at: www.dornbracht.com +49 (0) 2371 8899 900 mail@dornbracht.com

CL.1 Three-hole basin mixer without pop-up waste - Chrome

ST 010 106 4705

- with WAVES structure
- hole diameter 32 mm
- rosette 60 x 47 mm
- with hot marking
- WRAS

Chrome	20 005 706-00
Brushed Platinum	20 005 706-06
Dark Chrome	20 005 706-19
Brushed Champagne (22kt Gold)	20 005 706-46
Champagne (22kt Gold)	20 005 706-47
Brushed Dark Platinum	20 005 706-99

CL.1 Three-hole basin mixer without pop-up waste - Chrome

ST 010 106 4705

CL.1 Three-hole basin mixer without pop-up waste - Chrome

ST 010 106 4705

mm [inches]

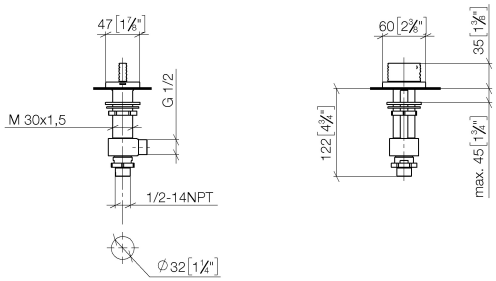

Flow rate chart

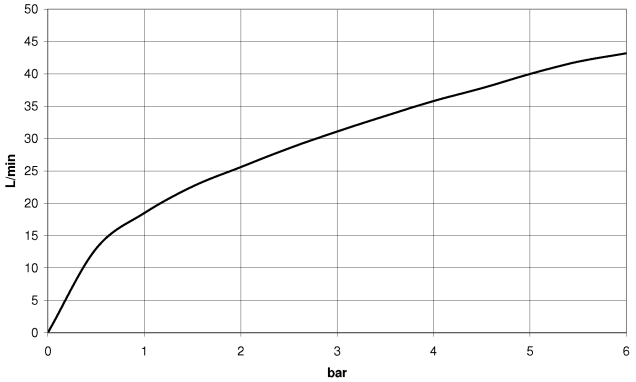

Codes & Standards

ADA	ASME A112.18.1/CSA B125.1	DIN 4109	ISO 3822
NSF/ANSI 372	NSF/ANSI/CAN 61	NSF372	NSF61
Scottish Water Byelaws	UK Water Supply Regulations	Ü-Zeichen	

Certificates

WRAS_1804	IAPMO_N-4	LGA_28	IAPMO_6	WRAS_240202

CL.1 Three-hole basin mixer without pop-up waste - Chrome

ST 010 106 4705

CL.1 Three-hole basin mixer without pop-up waste - Chrome

ST 010 106 4705

Parts for other finishes can be found here: Brushed Platinum

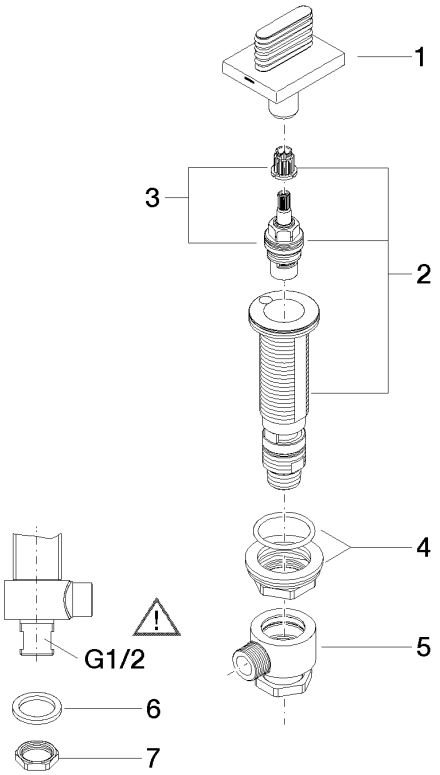

Spare parts list

No.	Item Number	Name	Quantity used	Delivery time
1	90 20 70 055 07-00	handle (hot)	1	10
2	04 17 11 058 52 90	side panel	1	2
3	90 90 03 152 00 90	top	1	2
4	04 23 10 032 78 90	fixing set	1	2
5	04 17 11 023 10 90	distributor	1	2
6	90 23 30 040 00-00	threaded connector	1	10
7	09 30 11 059 90	disc	1	2
8	09 23 10 012 90	nut	1	2

We reserve the right to change designs, product range and technical specifications without prior notice.
More information can be found at: www.dornbracht.com +49 (0) 2371 8899 900 mail@dornbracht.com